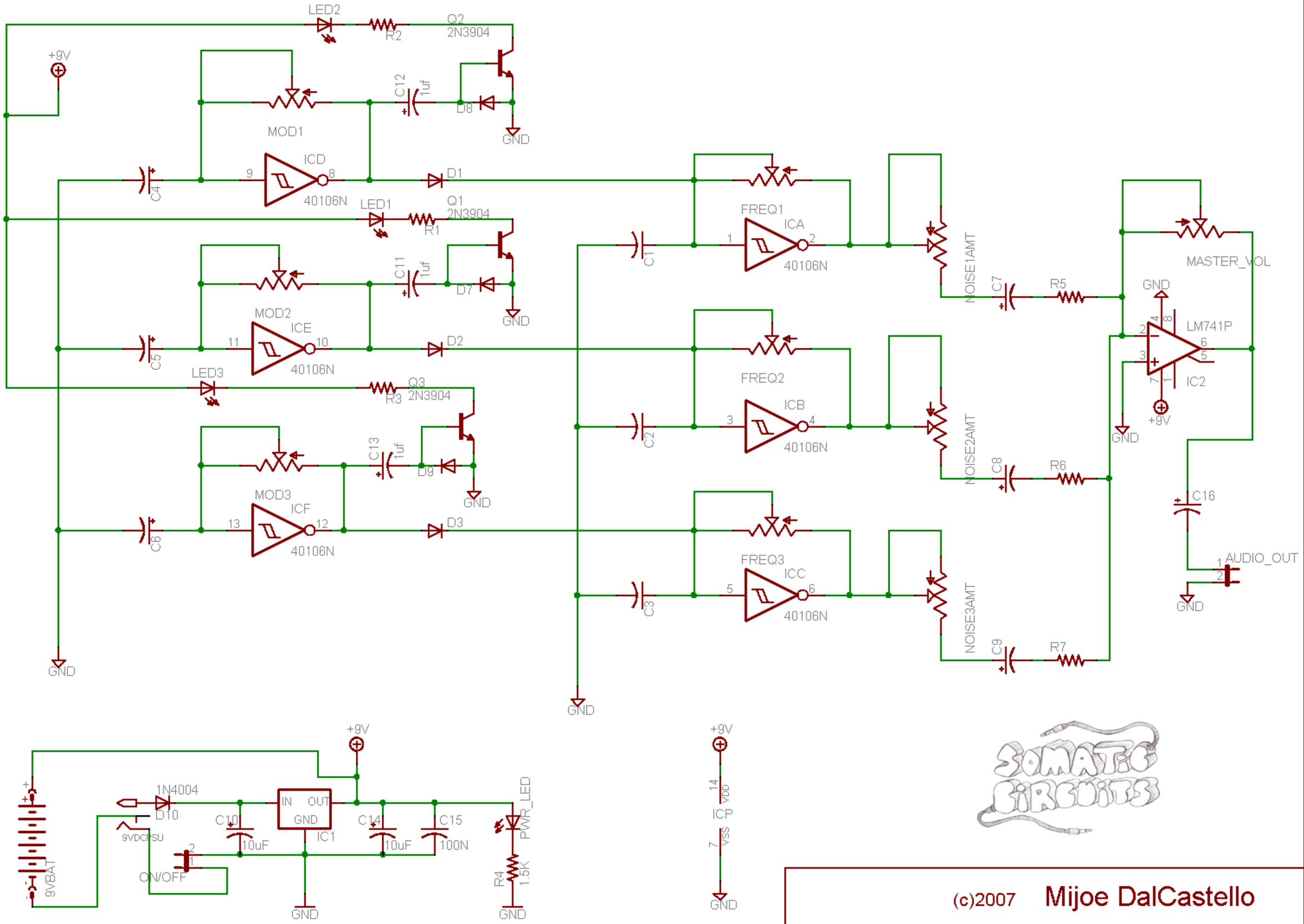

(c)2007 Mijoe DalCastello

TITLE: Malfunctionator_v1

Document Number: 1

REV: 1

Date: 5/12/2008 11:37:16a

Sheet: 1/1